# DATA SHEET

## 74ALVT162240

16-bit inverting buffer/driver with 30Ω termination resistors (3-State)

Product specification
Replaces data sheet of 1997 May 02
IC23 Data Handbook

1998 Feb 13

Philips
Semiconductors

PHILIPS

# 2.5V/3.3V 16-bit inverting buffer/driver with 30Ω termination resistors (3-State)

# 74ALVT162240

## FEATURES

- 16-bit bus interface
- 5V I/O compatibile
- 3-State buffers
- Output capability: +12mA/-12mA
- TTL input and output switching levels
- Input and output interface capability to systems at 5V supply
- Bus-hold data inputs eliminate the need for external pull-up resistors to hold unused inputs
- Live insertion/extraction permitted
- Outputs include series resistance of 30Ω making external termination resistors unnecessary
- Power-up 3-State
- No bus current loading when output is tied to 5V bus
- ESD protection exceeds 2000V per MIL STD 883 Method 3015 and 200V per Machine Model

## DESCRIPTION

The 74ALVT162240 is a high-performance BiCMOS product designed for $V_{CC}$ operation at 2.5V or 3.3V with I/O compatibility up to 5V.

This device is an inverting 16-bit buffer that is ideal for driving bus lines. The device features four Output Enables ($1\overline{OE}$, $2\overline{OE}$, $3\overline{OE}$, $4\overline{OE}$), each controlling four of the 3-State outputs.

The 74ALVT162240 is designed with 30Ω series resistance in both the pull-up and pull-down output structures. This design reduces line noise in applications such as memory address drivers, clock drivers, and bus receivers/transmitters.

## QUICK REFERENCE DATA

| SYMBOL | PARAMETER | CONDITIONS $T_{amb}$ = 25°C | TYPICAL | | UNIT |
|---|---|---|---|---|---|
| | | | 2.5V | 3.3V | |
| $t_{PLH}$<br>$t_{PHL}$ | Propagation delay<br>nAx to n$\overline{Y}$x | $C_L$ = 50pF | 3.7<br>2.3 | 2.6<br>2.2 | ns |
| $C_{IN}$ | Input capacitance DIR, $\overline{OE}$ | $V_I$ = 0V or $V_{CC}$ | 3 | 3 | pF |
| $C_{Out}$ | Output capacitance | $V_{I/O}$ = 0V or $V_{CC}$ | 9 | 9 | pF |
| $I_{CCZ}$ | Total supply current | Outputs disabled | 100 | 100 | µA |

## ORDERING INFORMATION

| PACKAGES | TEMPERATURE RANGE | OUTSIDE NORTH AMERICA | NORTH AMERICA | DWG NUMBER |
|---|---|---|---|---|
| 48-Pin Plastic SSOP Type III | –40°C to +85°C | 74ALVT162240 DL | AV162240 DL | SOT370-1 |
| 48-Pin Plastic TSSOP Type II | –40°C to +85°C | 74ALVT162240 DGG | AV162240 DGG | SOT362-1 |

## LOGIC SYMBOL

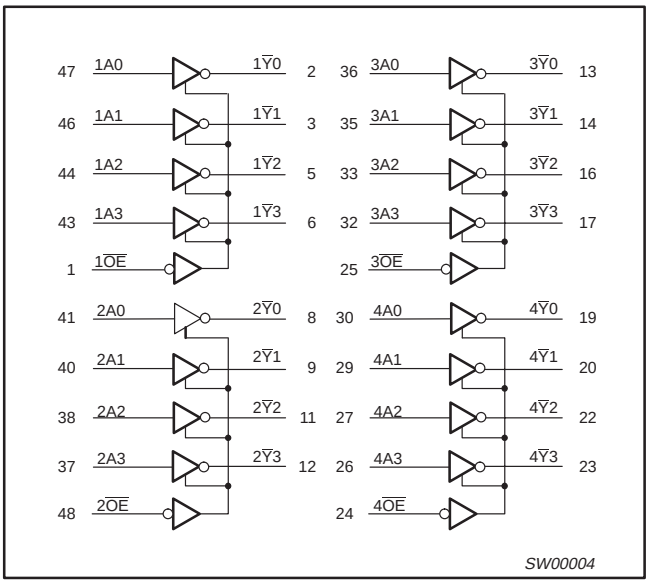


## PIN DESCRIPTION

| PIN NUMBER | SYMBOL | NAME AND FUNCTION |
|---|---|---|
| 47, 46, 44, 43, 41, 40, 38, 37, 36, 35, 33, 32, 30, 29, 27, 26 | 1A0 - 1A3<br>2A0 - 2A3<br>3A0 - 3A3<br>4A0 - 4A3 | Data inputs |
| 2, 3, 5, 6, 8, 9, 11, 12, 13, 14, 16, 17, 19, 20, 22, 23 | 1$\overline{Y}$0 - 1$\overline{Y}$3<br>2$\overline{Y}$0 - 2$\overline{Y}$3<br>3$\overline{Y}$0 - 3$\overline{Y}$3<br>4$\overline{Y}$0 - 4$\overline{Y}$3 | Data outputs |
| 1, 48<br>25, 24 | $1\overline{OE}$, $2\overline{OE}$,<br>$3\overline{OE}$, $4\overline{OE}$ | Output enables |
| 4, 10, 15, 21, 28, 34, 39, 45 | GND | Ground (0V) |
| 7, 18, 31, 42 | $V_{CC}$ | Positive supply voltage |

## LOGIC SYMBOL (IEEE/IEC)

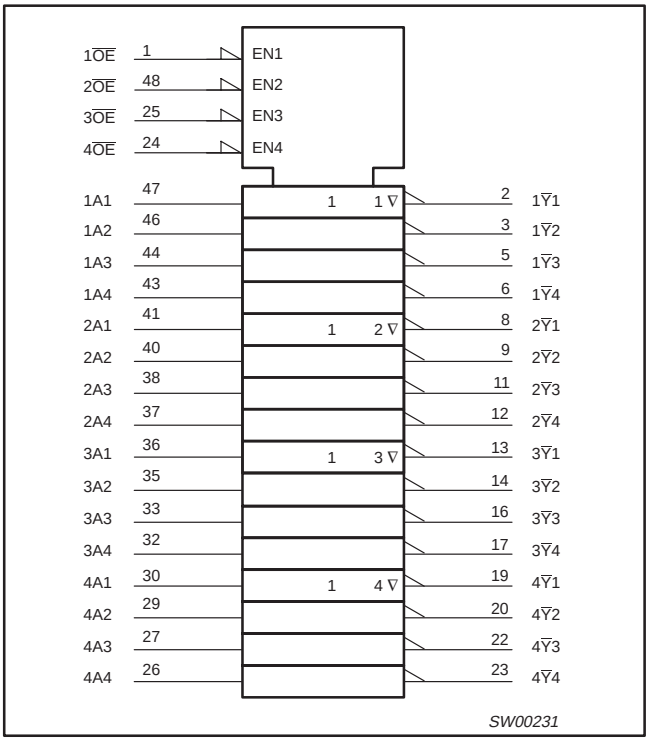


## PIN CONFIGURATION

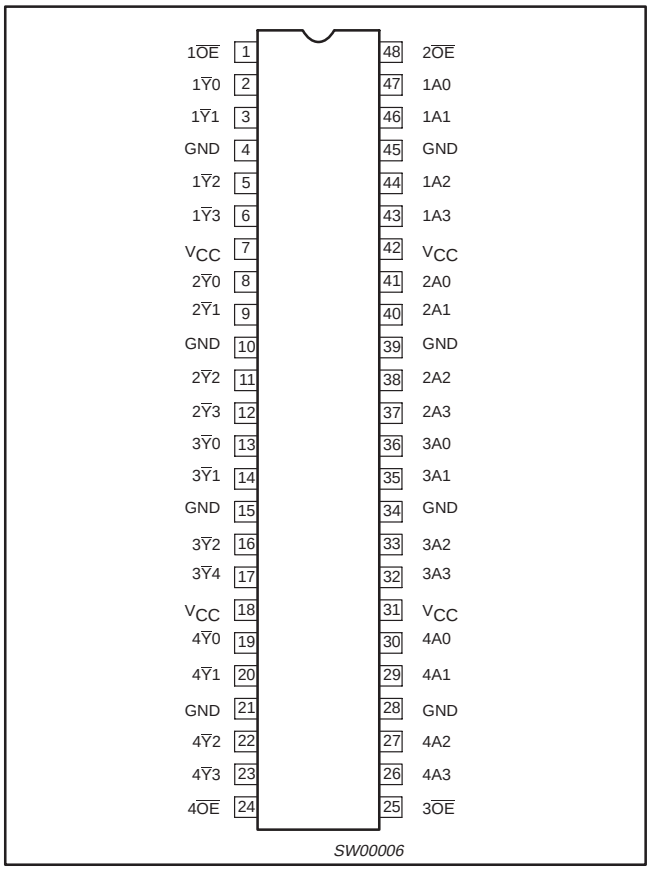


## SCHEMATIC OF EACH OUTPUT

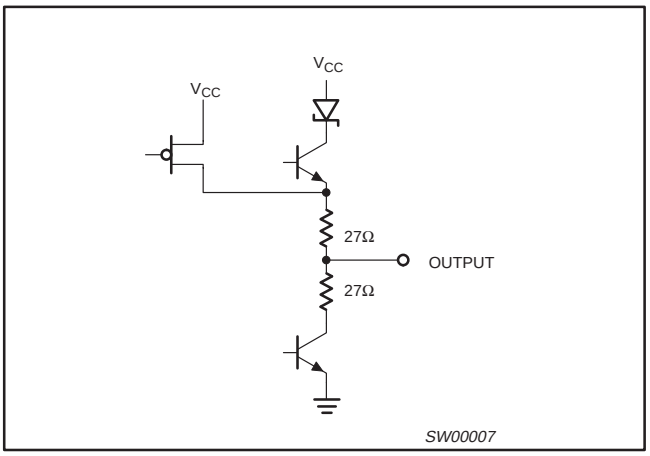


## FUNCTION TABLE

| INPUTS | | OUTPUTS |
|---|---|---|
| **n$\overline{OE}$** | **nAx** | **n$\overline{Y}$x** |
| L | L | H |
| L | H | L |
| H | X | Z |

H = High voltage level
L = Low voltage level
X = Don't care
Z = High Impedance "off" state

## ABSOLUTE MAXIMUM RATINGS[1, 2]

| SYMBOL | PARAMETER | CONDITIONS | RATING | UNIT |
|---|---|---|---|---|
| $V_{CC}$ | DC supply voltage | | –0.5 to +4.6 | V |
| $I_{IK}$ | DC input diode current | $V_I < 0$ | –50 | mA |
| $V_I$ | DC input voltage[3] | | –0.5 to +7.0 | V |
| $I_{OK}$ | DC output diode current | $V_O < 0$ | –50 | mA |
| $V_{OUT}$ | DC output voltage[3] | Output in Off or High state | –0.5 to +7.0 | V |
| $I_{OUT}$ | DC output current | Output in Low state | 128 | mA |
| | | Output in High state | –64 | |
| $T_{stg}$ | Storage temperature range | | –65 to +150 | °C |

**NOTES:**
1. Stresses beyond those listed may cause permanent damage to the device. These are stress ratings only and functional operation of the device at these or any other conditions beyond those indicated under "recommended operating conditions" is not implied. Exposure to absolute-maximum-rated conditions for extended periods may affect device reliability.
2. The performance capability of a high-performance integrated circuit in conjunction with its thermal environment can create junction temperatures which are detrimental to reliability. The maximum junction temperature of this integrated circuit should not exceed 150°C.
3. The input and output negative voltage ratings may be exceeded if the input and output clamp current ratings are observed.

## RECOMMENDED OPERATING CONDITIONS

| SYMBOL | PARAMETER | 2.5V RANGE LIMITS | | 3.3V RANGE LIMITS | | UNIT |
|---|---|---|---|---|---|---|
| | | MIN | MAX | MIN | MAX | |
| $V_{CC}$ | DC supply voltage | 2.3 | 2.7 | 3.0 | 3.6 | V |
| $V_I$ | Input voltage | 0 | 5.5 | 0 | 5.5 | V |
| $V_{IH}$ | High-level input voltage | 1.7 | | 2.0 | | V |
| $V_{IL}$ | Input voltage | | 0.7 | | 0.8 | V |
| $I_{OH}$ | High-level output current | | –8 | | –12 | mA |
| $I_{OL}$ | Low-level output current | | 12 | | 12 | mA |
| $\Delta t/\Delta v$ | Input transition rise or fall rate; Outputs enabled | | 10 | | 10 | ns/V |
| $T_{amb}$ | Operating free-air temperature range | –40 | +85 | –40 | +85 | °C |

## DC ELECTRICAL CHARACTERISTICS (3.3V ±0.3V RANGE)

| SYMBOL | PARAMETER | TEST CONDITIONS | | LIMITS Temp = -40°C to +85°C | | | UNIT |
|---|---|---|---|---|---|---|---|
| | | | | MIN | TYP[1] | MAX | |
| $V_{IK}$ | Input clamp voltage | $V_{CC}$ = 3.0V; $I_{IK}$ = –18mA | | | –0.85 | –1.2 | V |
| $V_{OH}$ | High-level output voltage | $V_{CC}$ = 3.0V; $I_{OH}$ = –12mA | | 2.0 | 2.5 | 2.5 | V |
| $V_{OL}$ | Low–level output voltage | $V_{CC}$ = 3.0V; $I_{OL}$ = 12mA | | | 0.5 | 0.8 | V |
| $I_I$ | Input leakage current | $V_{CC}$ = 3.6V; $V_I$ = $V_{CC}$ or GND | Control pins | | 0.1 | ±1 | µA |
| | | $V_{CC}$ = 0 or 3.6V; $V_I$ = 5.5V | | | 0.1 | 10 | |
| | | $V_{CC}$ = 3.6V; $V_I$ = 5.5V | Data pins[4] | | 0.1 | 10 | |
| | | $V_{CC}$ = 3.6V; $V_I$ = $V_{CC}$ | | | 0.5 | 1 | |
| | | $V_{CC}$ = 3.6V; $V_I$ = 0 | | | 0.1 | -5 | |
| $I_{OFF}$ | Off current | $V_{CC}$ = 0V; $V_I$ or $V_O$ = 0 to 4.5V | | | 0.1 | ±100 | µA |
| $I_{HOLD}$ | Bus Hold current Data inputs[5] | $V_{CC}$ = 3.0V; $V_I$ = 0.8V | | 75 | 130 | | µA |
| | | $V_{CC}$ = 3.0V; $V_I$ = 2.0V | | –75 | –140 | | |
| | | $V_I$ = 0V to 3.6V; $V_{CC}$= 3.6V | | ±500 | | | |
| $I_{EX}$ | Current into an output in the High state when $V_O > V_{CC}$ | $V_O$ = 5.5V; $V_{CC}$ = 3.0V | | | 10 | 125 | µA |
| $I_{PU/PD}$ | Power up/down 3-State output current[3] | $V_{CC} \leq 1.2$V; $V_O$ = 0.5V to $V_{CC}$; $V_I$ = GND or $V_{CC}$; $OE/\overline{OE}$ = Don't care | | | 1 | ±100 | µA |
| $I_{OZH}$ | 3-State output High current | $V_{CC}$ = 3.6V; $V_O$ = 3.0V; $V_I$ = $V_{IL}$ or $V_{IH}$ | | | 0.5 | 5 | µA |
| $I_{OZL}$ | 3-State output Low current | $V_{CC}$ = 3.6V; $V_O$ = 0.5V; $V_I$ = $V_{IL}$ or $V_{IH}$ | | | 0.5 | –5 | µA |
| $I_{CCH}$ | Quiescent supply current | $V_{CC}$ = 3.6V; Outputs High, $V_I$ = GND or $V_{CC}$, $I_O$ = 0 | | | 0.05 | 0.1 | mA |
| $I_{CCL}$ | | $V_{CC}$ = 3.6V; Outputs Low, $V_I$ = GND or $V_{CC}$, $I_O$ = 0 | | | 3.6 | 5.5 | |
| $I_{CCZ}$ | | $V_{CC}$ = 3.6V; Outputs Disabled; $V_I$ = GND or $V_{CC}$, $I_O$ = 0[5] | | | 0.06 | 0.1 | |
| $\Delta I_{CC}$ | Additional supply current per input pin[2] | $V_{CC}$ = 3V to 3.6V; One input at $V_{CC}$–0.6V, Other inputs at $V_{CC}$ or GND | | | 0.1 | 0.4 | mA |

**NOTES:**
1. All typical values are at $V_{CC}$ = 3.3V and $T_{amb}$ = 25°C.
2. This is the increase in supply current for each input at the specified voltage level other than $V_{CC}$ or GND
3. This parameter is valid for any $V_{CC}$ between 0V and 1.2V with a transition time of up to 10msec. From $V_{CC}$ = 1.2V to $V_{CC}$ = 3.3V ± 0.3V a transition time of 100µsec is permitted. This parameter is valid for $T_{amb}$ = 25°C only.
4. Unused pins at $V_{CC}$ or GND.
5. $I_{CCZ}$ is measured with outputs pulled up to $V_{CC}$ or pulled down to ground.

6. This is the bus hold overdrive current required to force the input to the opposite logic state.

## AC CHARACTERISTICS (3.3V ±0.3V RANGE)

GND = 0V; $t_R = t_F$ = 2.5ns; $C_L$ = 50pF; $R_L$ = 500Ω; $T_{amb}$ = –40°C to +85°C.

| SYMBOL | PARAMETER | WAVEFORM | LIMITS $V_{CC}$ = 3.3V ±0.3V MIN | TYP[1] | MAX | UNIT |
|---|---|---|---|---|---|---|
| $t_{PLH}$<br>$t_{PHL}$ | Propagation delay<br>nAx to nBx or nBx to nAx | 1 | 1.0<br>1.0 | 2.6<br>2.2 | 4.3<br>3.2 | ns |
| $t_{PZH}$<br>$t_{PZL}$ | Output enable time<br>to High and Low level | 2 | 1.5<br>1.5 | 3.3<br>2.5 | 5.2<br>3.7 | ns |
| $t_{PHZ}$<br>$t_{PLZ}$ | Output disable time<br>from High and Low Level | 2 | 1.5<br>1.5 | 3.0<br>2.4 | 4.4<br>3.6 | ns |

**NOTE:**
1. All typical values are at $V_{CC}$ = 3.3V and $T_{amb}$ = 25°C.

## DC ELECTRICAL CHARACTERISTICS (2.5V ±0.2V RANGE)

| SYMBOL | PARAMETER | TEST CONDITIONS | | LIMITS Temp = -40°C to +85°C MIN | TYP[1] | MAX | UNIT |
|---|---|---|---|---|---|---|---|
| $V_{IK}$ | Input clamp voltage | $V_{CC}$ = 2.3V; $I_{IK}$ = –18mA | | | –0.85 | –1.2 | V |
| $V_{OH}$ | High-level output voltage | $V_{CC}$ = 2.3V; $I_{OH}$ = –8mA | | 1.7 | | | V |
| $V_{OL}$ | Low-level output voltage | $V_{CC}$ = 2.3V; $I_{OL}$ = 12mA | | | 0.5 | 0.7 | V |
| $I_I$ | Input leakage current | $V_{CC}$ = 2.7V; $V_I$ = $V_{CC}$ or GND | Control pins | | 0.1 | ±1 | μA |
| | | $V_{CC}$ = 0 or 2.7V; $V_I$ = 5.5V | Control pins | | 0.1 | 10 | μA |
| | | $V_{CC}$ = 2.7V; $V_I$ = 5.5V | Data pins[4] | | 0.1 | 10 | μA |
| | | $V_{CC}$ = 2.7V; $V_I$ = $V_{CC}$ | Data pins[4] | | 0.1 | 1 | μA |
| | | $V_{CC}$ = 2.7V; $V_I$ = 0 | Data pins[4] | | 0.1 | -5 | μA |
| $I_{OFF}$ | Off current | $V_{CC}$ = 0V; $V_I$ or $V_O$ = 0 to 4.5V | | | 0.1 | ±100 | μA |
| $I_{HOLD}$ | Bus Hold current<br>Data inputs[6] | $V_{CC}$ = 2.5V; $V_I$ = 0.7V | | | 90 | | μA |
| | | $V_{CC}$ = 2.5V; $V_I$ = 1.7V | | | –10 | | μA |
| $I_{EX}$ | Current into an output in the High state when $V_O > V_{CC}$ | $V_O$ = 5.5V; $V_{CC}$ = 2.3V | | | 10 | 125 | μA |
| $I_{PU/PD}$ | Power up/down 3-State output current[3] | $V_{CC} \leq 1.2$V; $V_O$ = 0.5V to $V_{CC}$; $V_I$ = GND or $V_{CC}$; $\overline{OE}$/OE = Don't care | | | 1 | ±100 | μA |
| $I_{OZH}$ | 3-State output High current | $V_{CC}$ = 2.7V; $V_O$ = 2.3V; $V_I$ = $V_{IL}$ or $V_{IH}$ | | | 0.5 | 5 | μA |
| $I_{OZL}$ | 3-State output Low current | $V_{CC}$ = 2.7V; $V_O$ = 0.5V; $V_I$ = $V_{IL}$ or $V_{IH}$ | | | 0.5 | –5 | μA |
| $I_{CCH}$ | Quiescent supply current | $V_{CC}$ = 2.7V; Outputs High, $V_I$ = GND or $V_{CC}$, $I_O$ = 0 | | | 0.04 | 0.1 | mA |
| $I_{CCL}$ | Quiescent supply current | $V_{CC}$ = 2.7V; Outputs Low, $V_I$ = GND or $V_{CC}$, $I_O$ = 0 | | | 2.6 | 4.5 | mA |
| $I_{CCZ}$ | Quiescent supply current | $V_{CC}$ = 2.7V; Outputs Disabled; $V_I$ = GND or $V_{CC}$, $I_O$ = 0[5] | | | 0.04 | 0.1 | mA |
| $\Delta I_{CC}$ | Additional supply current per input pin[2] | $V_{CC}$ = 2.3V to 2.7V; One input at $V_{CC}$–0.6V, Other inputs at $V_{CC}$ or GND | | | 0.1 | 0.4 | mA |

**NOTES:**
1. All typical values are at $V_{CC}$ = 2.5V and $T_{amb}$ = 25°C.
2. This is the increase in supply current for each input at the specified voltage level other than $V_{CC}$ or GND
3. This parameter is valid for any $V_{CC}$ between 0V and 1.2V with a transition time of up to 10msec. From $V_{CC}$ = 1.2V to $V_{CC}$ = 2.5V ± 0.2V a transition time of 100μsec is permitted. This parameter is valid for $T_{amb}$ = 25°C only.
4. Unused pins at $V_{CC}$ or GND.
5. $I_{CCZ}$ is measured with outputs pulled up to $V_{CC}$ or pulled down to ground.
6. Not guaranteed.

## AC CHARACTERISTICS (2.5V ±0.2V RANGE)

GND = 0V; $t_R = t_F$ = 2.5ns; $C_L$ = 50pF; $R_L$ = 500Ω; $T_{amb}$ = –40°C to +85°C.

| SYMBOL | PARAMETER | WAVEFORM | LIMITS | | | UNIT |
|---|---|---|---|---|---|---|
| | | | $V_{CC}$ = 2.5V ±0.2V | | | |
| | | | MIN | TYP[1] | MAX | |
| $t_{PLH}$<br>$t_{PHL}$ | Propagation delay<br>nAx to nBx or nBx to nAx | 1 | 1.0<br>1.0 | 3.7<br>2.3 | 5.4<br>3.5 | ns |
| $t_{PZH}$<br>$t_{PZL}$ | Output enable time<br>to High and Low level | 2 | 1.5<br>1.5 | 4.5<br>3.1 | 6.8<br>4.9 | ns |
| $t_{PHZ}$<br>$t_{PLZ}$ | Output disable time<br>from High and Low Level | 2 | 1.5<br>1.0 | 2.8<br>2.0 | 4.4<br>3.3 | ns |

**NOTE:**

1. All typical values are at $V_{CC}$ = 2.5V and $T_{amb}$ = 25°C.

## AC WAVEFORMS

$V_M$ = 1.5V at $V_{CC} \geq$ 3.0V, $V_M = V_{CC}/2$ at $V_{CC} \leq$ 2.7V
$V_X = V_{OL}$ + 0.3V at $V_{CC} \geq$ 3.0V, $V_X = V_{OL}$ + 0.150V at $V_{CC} \leq$ 2.7V
$V_Y = V_{OH}$ – 0.3V at $V_{CC} \geq$ 3.0V, $V_Y = V_{OH}$ – 0.150V at $V_{CC} \leq$ 2.7V

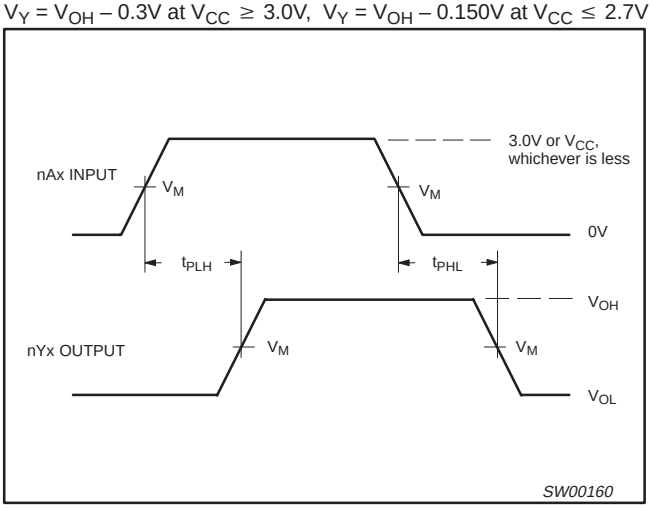


**Waveform 1. Input (nAx) to Output (n$\overline{Y}$x) Propagation Delays**

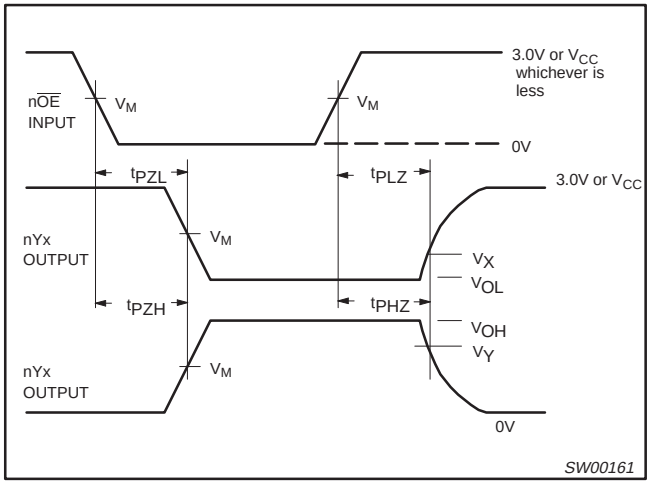


**Waveform 2. 3-State Output Enable and Disable Times**

## TEST CIRCUIT AND WAVEFORMS

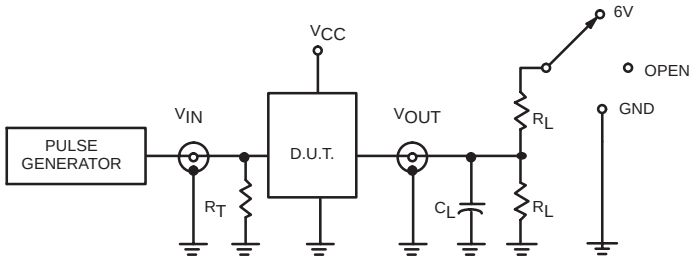


**Test Circuit for 3-State Outputs**

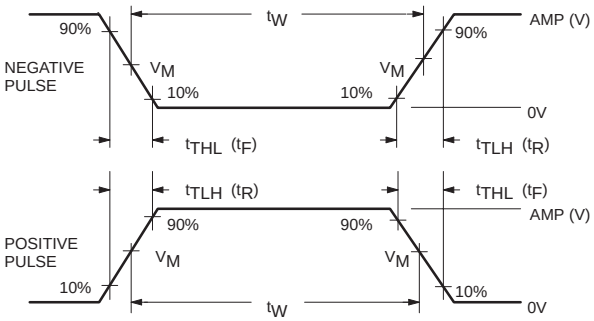


**Input Pulse Definition**

### SWITCH POSITION

| TEST | SWITCH |
|---|---|
| $t_{PHZ}/t_{PZH}$ | GND |
| $t_{PLZ}/t_{PZL}$ | 6V or $V_{CC}$ x 2 |
| $t_{PLH}/t_{PHL}$ | open |

### DEFINITIONS

$R_L$ = Load resistor; see AC CHARACTERISTICS for value.

$C_L$ = Load capacitance includes jig and probe capacitance; see AC CHARACTERISTICS for value.

$R_T$ = Termination resistance should be equal to $Z_{OUT}$ of pulse generators.

| FAMILY | INPUT PULSE REQUIREMENTS | | | | |
|---|---|---|---|---|---|
| | Amplitude | Rep. Rate | $t_W$ | $t_R$ | $t_F$ |
| 74ALVT16 | 3.0V or $V_{CC}$ whichever is less | ≤10MHz | 500ns | ≤2.5ns | ≤2.5ns |

SW00232

**SSOP48: plastic shrink small outline package; 48 leads; body width 7.5 mm** **SOT370-1**

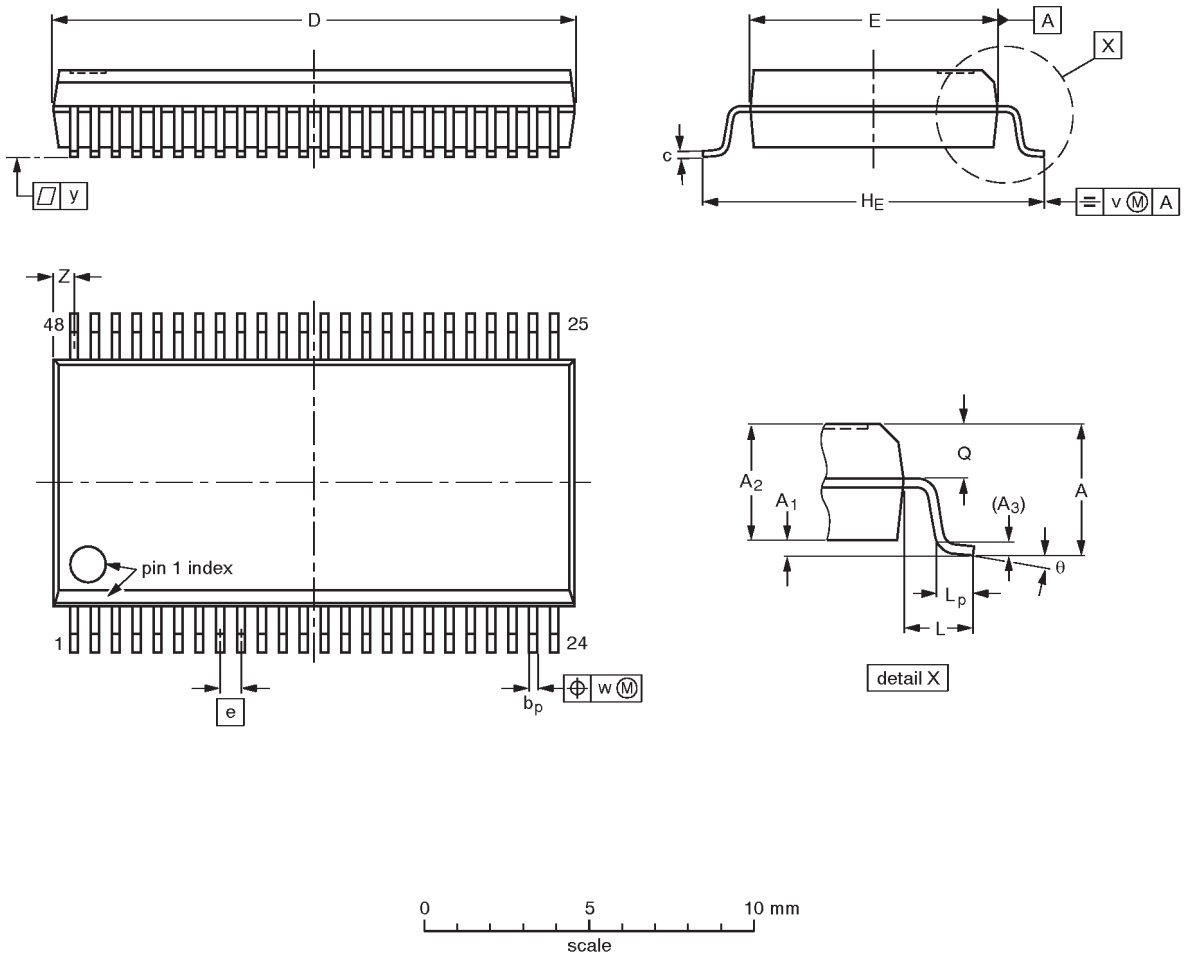


**DIMENSIONS (mm are the original dimensions)**

| UNIT | A max. | $A_1$ | $A_2$ | $A_3$ | $b_p$ | c | D (1) | E (1) | e | $H_E$ | L | $L_p$ | Q | v | w | y | Z (1) | θ |
|---|---|---|---|---|---|---|---|---|---|---|---|---|---|---|---|---|---|---|
| mm | 2.8 | 0.4<br>0.2 | 2.35<br>2.20 | 0.25 | 0.3<br>0.2 | 0.22<br>0.13 | 16.00<br>15.75 | 7.6<br>7.4 | 0.635 | 10.4<br>10.1 | 1.4 | 1.0<br>0.6 | 1.2<br>1.0 | 0.25 | 0.18 | 0.1 | 0.85<br>0.40 | 8°<br>0° |

**Note**

1. Plastic or metal protrusions of 0.25 mm maximum per side are not included.

| OUTLINE VERSION | REFERENCES | | | | EUROPEAN PROJECTION | ISSUE DATE |
|---|---|---|---|---|---|---|
| | IEC | JEDEC | EIAJ | | | |
| SOT370-1 | | MO-118AA | | | | ~~93-11-02~~<br>95-02-04 |

**TSSOP48: plastic thin shrink small outline package; 48 leads; body width 6.1mm** **SOT362-1**

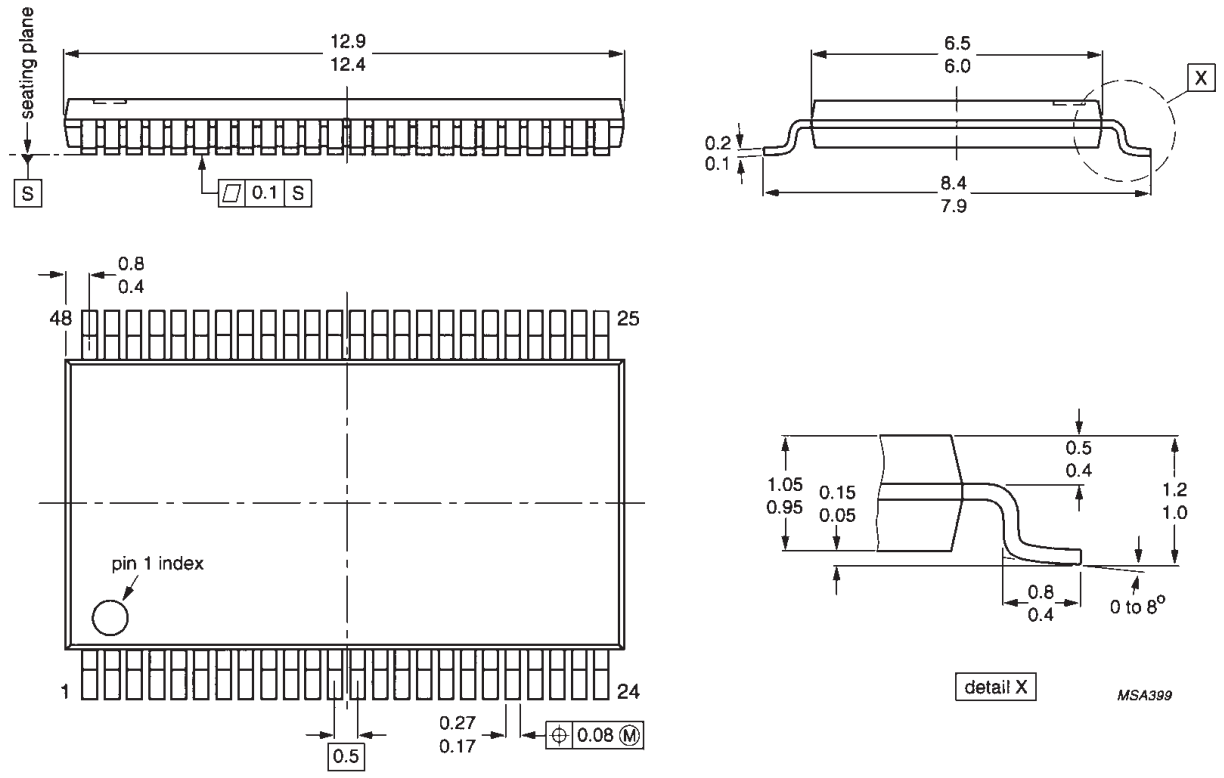


Dimensions in mm.

## Data sheet status

| Data sheet status | Product status | Definition [1] |
|---|---|---|
| Objective specification | Development | This data sheet contains the design target or goal specifications for product development. Specification may change in any manner without notice. |
| Preliminary specification | Qualification | This data sheet contains preliminary data, and supplementary data will be published at a later date. Philips Semiconductors reserves the right to make chages at any time without notice in order to improve design and supply the best possible product. |
| Product specification | Production | This data sheet contains final specifications. Philips Semiconductors reserves the right to make changes at any time without notice in order to improve design and supply the best possible product. |

[1] Please consult the most recently issued datasheet before initiating or completing a design.

## Definitions

**Short-form specification —** The data in a short-form specification is extracted from a full data sheet with the same type number and title. For detailed information see the relevant data sheet or data handbook.

**Limiting values definition —** Limiting values given are in accordance with the Absolute Maximum Rating System (IEC 134). Stress above one or more of the limiting values may cause permanent damage to the device. These are stress ratings only and operation of the device at these or at any other conditions above those given in the Characteristics sections of the specification is not implied. Exposure to limiting values for extended periods may affect device reliability.

**Application information —** Applications that are described herein for any of these products are for illustrative purposes only. Philips Semiconductors make no representation or warranty that such applications will be suitable for the specified use without further testing or modification.

## Disclaimers

**Life support —** These products are not designed for use in life support appliances, devices or systems where malfunction of these products can reasonably be expected to result in personal injury. Philips Semiconductors customers using or selling these products for use in such applications do so at their own risk and agree to fully indemnify Philips Semiconductors for any damages resulting from such application.

**Right to make changes —** Philips Semiconductors reserves the right to make changes, without notice, in the products, including circuits, standard cells, and/or software, described or contained herein in order to improve design and/or performance. Philips Semiconductors assumes no responsibility or liability for the use of any of these products, conveys no license or title under any patent, copyright, or mask work right to these products, and makes no representations or warranties that these products are free from patent, copyright, or mask work right infringement, unless otherwise specified.

**Philips Semiconductors**
**811 East Arques Avenue**
**P.O. Box 3409**
**Sunnyvale, California 94088–3409**
**Telephone 800-234-7381**

© Copyright Philips Electronics North America Corporation 1998
All rights reserved. Printed in U.S.A.

print code Date of release: 05-96
Document order number: 9397-750-03616

Let's make things better.

Philips Semiconductors

PHILIPS